NINER ENCYCLOPEDIA >>

SPECIFICATION & SETUP GUIDE

Your one-stop reference for all Niner Bikes technical information, setup guides, warranty and related data.

NINER ENCYCLOPEDIA >>
SPECIFICATION & SETUP GUIDE

CONTENTS

WELCOME TO THE BIG REVOLUTION!

Call me Ishmael.

Ha, just kidding.

This is your complete guide to the Niner Bikes line of frames and bicycles. If you read this, you have bettered about 95% of the buying public. In fact, opening the first page and doing anything more than giving it a cursory glance means that you are way ahead of the curve. Congratulations!

This document contains some pretty important information that will help you care for and adjust your Niner frame. It also contains information that will help you to get the most out of every Niner product. We understand that you would rather be riding than reading, so we will try to be as brief and succinct as possible, while also giving you clear answers to your questions.

We offer a warranty on all Niner products - the specifics are contained in this document. You must register your warranty to receive full benefits.

Besides that, get out on your Niner bike, have an amazing adventure, and keep the rubber side down!

Chris & Steve
Niner Bikes

This symbol denotes critical information or processes that deserve extra attention.

GEOMETRY PHILOSOPHY & BASIC INFO

How is Niner's geometry like dessert?

When considering bike frame options, we often hear riders ask questions like "what headtube angle does this frame have?" or, "what is the seat angle?". While these are important numbers to consider, we would like to encourage you to step back and consider the whole frame when evaluating geometry. In fact, we would like to have you consider the whole bike build.

Think of bicycle geometry like you think of a cake. Cakes need flour, sugar, butter and eggs - if the chef alters the ratio, the taste and texture will vary. The same goes for bicycles - a frame designer that considers only one angle is creating a cake with only one ingredient in mind. It is essential that every tube length and every angle be evaluated in concert with the rest of the frame design and with the anticipated specifications of the complete bike in mind.

Now, there is room for variation in any recipe, and a good chef will know where they can have some fun with new ingredients. Perhaps one cake will contain chocolate, another might be made with carrots - everybody has a favorite. There is room for a lot of personalization in bike set up, too, but in the end, every bike still fits within a set of parameters that defines the geometry philosophies of the frame builder.

So, how does Niner geometry fit into this "cake" theory? Because we only build 29ers, we are able to make bikes in every flavor while everyone else is still learning how to turn on the oven. For every model, whether it is our lightest cross country hardtail or our burliest full suspension bike, we have considered how each angle or length will interact with big wheels to affect the finished build and in the end, how that finished build will affect the riding experience of every Niner owner.

The best way to evaluate any geometry is to ride the bikes. We know that in head to head comparisons, Niner's geometry will shine through. Demo a Niner and see for yourself.

FRAME CARE & MAINTENANCE - STEEL

Niner Bikes STRONGLY recommends that you apply Frame Saver® to your new steel frame. Please follow the manufacture recommendations for application. You may see some rust within the frame already; this is only minor and not cause for alarm, hysterics, or nights of lost sleep. After installing the Frame Saver® all will be good again. We would have installed Frame Saver® prior to shipping but it is a combustible material and would require us to have to change our storage facility to meet the ventilation needs set forth by the city. We would also have to substantially increase the shipping costs to you do to the increased packaging required by Federal Law. Following is an article by Peter Weigle re-printed with permission:

Out of Sight, Out of Mind - Rust Never Sleeps

Steel frames rust, that's all there is too it. They rust when scratched, chipped, or abraded in any way. Most people know this. What they don't know is that steel frames also rust from the inside out.. The steel inside the frame is almost always left raw and unprotected. If a little moisture enters the frame, the environment within will resemble a terrarium. The humid air and water droplets will be attacking the steel and you won't even know it. Left untreated, the frame will be destroyed.

To help prevent rust inside steel tubes, Frame Saver® was developed. It is a product that was long overdue. It coats the inside of the steel tubes protecting them from the corrosive elements that find their way there. True, bicycles have been around for 100 years and there are plenty of early examples of frames that have lasted lifetimes without rust, so why all the fuss now? Because in the last couple of decades there have been major changes in materials, equipment, and bike usage that have made internal frame protection even more important.

Today's high performance frames are being made with extremely thin walled tubing compared to frames of the past. There used to be a safety margin should the tubes rust. Not any more! There are a few construction details found in some frames that have trapped water and caused premature failures. Frame builders who do repair work, painters and mechanics, are seeing a higher incidence of rust-throughs these days, and it is only going to get worse, unless these frames are rustproofed on the inside. Most new bikes are equipped with sealed bearings, which mean fewer overhauls and fewer chances to look in the bottom bracket to see what is going on. After many carefree miles, many mechanics and owners are shocked when they pull the bottom bracket bearings and find rust-colored sludge, or flakes of rust, inside the shell. Hopefully, it's not too late to save a frame in this condition.

Mountain bikes are supposed to be used in extreme conditions. Stream crossings, fall, winter, and early spring rides all involve water. Even if you don't ride in the rain or cross raging rapids, moisture still finds its way into a frame. Take your bike out of a warm house on a cool, damp day, or on a hot day return your bike to a cool, damp basement for storage and what happens? As the warm air inside your frame cools and contracts, it pulls in the damp air past the seat post, threads, and vent holes. This may only be a minute amount, but do this many times over the course of the season and the cumulative effect can be devastating.

It would be misleading to suggest that every steel frame is a risk because there are many factors involved. It is impossible to tell from the outside, which frames are screaming for attention. Why take a chance? With the cost of bikes these days, think of it as cheap insurance. Prevention is easy. An application of Frame Saver® will add years to a frame's life and peace of mind to its owner. May you both ride happily into the next millennium and beyond.

FRAME CARE & MAINTENANCE - ALLOY, CARBON & FULL SUSPENSION

Caring for your Carbon, Alloy (Aluminum) or Scandium Niner frame is a simple affair: use common sense as your guide. Keep your frame clean, check your frame and components in between rides for unusual wear and tear, and give it a nice shine every once in a while so that it knows you care. In addition, it's important to check your frame regularly for cracks or sign of physical trauma. This is, of course, much easier to do with a clean frame. We suggest using a non-toxic cleaner designed for bicycles when cleaning your frame - Pedros and Simple Green both make good products. Use a nice, clean, soft rag or old t-shirt for cleaning to avoid abrasion. Don't use high pressure washers, as this may drive grit and/or water into your bearings and components.

Additionally, the Air 9 Carbon frame includes 2 titanium guards on the driveside of the bottom bracket and one 3M guard on the driveside seatstay to protect from chain damage. The A9C also includes a chainstay protector. It is imperative that people running gears should use some sort of chainstay protector to keep chain slap from damaging the chainstay. Each carbon frame also includes a large strip of 3M tape that we recommend using for downtube protection. Please see the section on post-crash inspection for tips on how to regularly inspect your frame for safety.

Niner full suspension bicycles need a few extra maintenance steps. Check the fasteners on your linkage every few rides. Make sure that all fasteners are torqued to 65 in/lbs with blue Loctite. Carefully follow the use instructions from Loctite. A smooth quiet ride depends upon bearings. Replace every 200 hours of ride time.

POST-CRASH SAFETY INSPECTION

After a crash or significant impact:

1. Check yourself for injuries, take care of them to the best of your ability. Seek medical help if necessary.

2. Next, check your bicycle for damage on the spot. Do not ride if any problems are detected.

3. Bring your bike to your Niner dealer for professional inspection. The entire bike must be inspected for damage - this may require disassembly, depending upon the dealer's recommendation. Err on the side of caution.

⚠ A crash or impact can put extraordinary stress on a bicycle, causing it to fail or to fatigue prematurely. Components suffering from stress fatigue can fail suddenly with no warning, causing loss of control, serious injury or death. This applies to all components, not just those made or manufactured by Niner Bikes.

Inspection of frame, fork and components:

Cracking is one of the most obvious signs of damage in all frame and fork materials. Inspect your entire bicycle for cracks or splintering. If any part of the bicycle is cracked or splintered, discontinue use immediately, as a crack may lead to catastrophic failure.

Delamination is serious damage that can occur in composites such as carbon fiber. Composites are made from layers of fabric and delamination means the layers of fabric are no longer bonded together. Do not ride any component or frame that is delaminating. These are some delamination clues:

1. Cloudy or white areas. This kind of blemish looks different from the ordinary undamaged areas, opaque and cloudy instead of glossy and transparent.

2. Bulging or deformation. If delamination occurs, the surface shape may change. A bump, bulge or soft spot may be apparent.

3. A difference in sound when tapping the surface. Gently tapping an undamaged composite with a coin should produce a consistent sound, usually hard or sharp. Delaminated areas may sound duller than other areas.

Unusual Noises can be caused by cracks or delamination. Think of such noises as a serious warning signal. A well-maintained bicycle will be quiet and free of creaks or squeaks. Investigate and locate the source of any noise. The sound may not be a crack or delamination but should be fixed before riding.

Misalignment cannot be corrected by attempting to bend the frame. Do not attempt to realign bent Niner frames.

⚠ Do not ride a frame or component with any delamination or cracks. Riding a delaminated or cracked frame or component could lead to complete failure with risk of injury or death. Please ensure that the damaged component is destroyed, not re-sold.

NINER WARRANTY & CRASH REPLACEMENT

Niner Bikes will warranty the Air 9 Carbon frame, the Niner Carbon Fork and the Niner Flat Top Carbon bar for a minimum period of five (5) years from the date of purchase for the original owner only.

Niner Bikes will warranty all non-carbon fiber frames for material defects and workmanship for a minimum period of two (2) years from the date of purchase for the original owner only.

This warranty is subject to approval by Niner Bikes and is only valid for bicycles damaged under normal use. This warranty does not extend to Darwinian usage of the frame. It does not cover paint/finish issues, minor dents, or issues arising from normal wear and tear. This limited warranty applies to the frame only. All other components are covered under the warranty from the manufacturers of said components. This warranty is void if the frameset was not purchased new or assembled correctly.

Upon purchase of a Niner frame, bicycle or components, owner is required to register their warranty with Niner Bikes, using the supplied warranty registration card. Owner must retain a copy of their receipt from an authorized Niner Dealer - in the event they do require warranty service, this proof of purchase will be requested by Niner.

Should the frame be determined to be defective by Niner Bikes, Niner will repair or replace the frame at Niner's sole discretion. Niner will not pay for any labor charges associated with the warranty of said frame, but will pay for shipping of the frame to and from Niner's headquarters. To exercise this warranty, please call or email Niner Bikes as soon as a problem arises. Niner will make every effort to repair/replace a warranty claim in a timely fashion and keep you riding. It would be helpful if you timed your warranty claim with a massive snow storm or torrential rain storm so that you don't notice that your bike is un-rideable.

Warranty Procedure:

1. If you have a potential warranty claim, the best, fastest approach is to take your bike to your Niner dealer/distributor and have them process it for you.

2. If you are unable to work through your Niner dealer, please contact service@ninerbikes.com or call us directly at 1-877-646-3792 to begin the warranty process.

3. If we determine that your frame is covered under warranty, and is deemed needing replacement, not repair, you may choose to receive a free equivalent replacement frame or you may upgrade to a different frame at 30% off the upgraded frame price.

Crash Replacement Procedure:

For those of you who bring honesty, integrity and a sense of responsibility for your actions, and who are honest with us about how the frame came to be in it's current 'crashed' state (for example: dude, I totally just drove my bike into the garage), or if your bike is outside the warranty period. We have a no fault, no questions asked 'crash replacement' policy. Niner Bikes does offer a crash/accident replacement program - 20% off a replacement frame.

To take advantage of our crash replacement program, see your Niner dealer.

⚠ STUNT RIDING WARNING:
Off road riding is extremely dangerous. Some downhill riders and freeriders reach speeds similar to motorcycles, thus face similar risks and hazards. When engaging in these activities, you, your bicycle and your safety equipment must be in perfect condition. We recommend that at all times you wear appropriate safety gear, including, but not limited to an approved helmet, full finger gloves, body armor and protective footwear.

Not every bicycle is built for every bicycling activity. Please consult your Niner dealer to ensure that you have the right bicycle and equipment designed for the style of riding you intend to do.

No bicycle is indestructible. Downhill racing, severe off-road riding, jumping and stunt riding increase stress levels on every part of your bicycle. Frames or parts under high stress may fail causing you to lose control or fall. Because of the risk involved, Niner recommends that you conduct a thorough inspection of your bicycle, including frame and components before each ride. If you fall while riding, inspect yourself for injury first, then carefully inspect your bicycle for any damage that may have occurred as a result of the crash.
When inspecting your bicycle for damage, look for:

- bent or broken components, such as the handlebar, stem, seatpost, pedals.
- dents, cracks, scratches, deformation or discoloration.

Because damage may be internal or hidden, if any of these signs appear, no matter how small they are, stop riding your bicycle and take it to an authorized Niner dealer for further inspection.

Safety should always come first. Always ride within your ability and with the proper safety equipment.

Stunt riding, severe off road riding, jumping or downhill riding is very dangerous and the rider voluntarily assumes the risk that the bicycle frame and/or its components will bend or break and voluntarily assumes the risk of injury or death.

Niner does not warranty the bicycle or components for such activities and expressly disclaims all warranties including the warranty of fitness for particular purpose and merchantability.

Although many catalogs, advertisements and articles about bicycling depict riders racing, jumping, stunt riding, and or riding hard off-road, this activity is extremely dangerous, increases the riders risk of injury or death and potentially increases the severity of any injury. The action depicted is performed by experts with many years of training and experience. Even with this experience, cyclists who engage in such activity are often severely injured. It is also foreseeable that during some jumps, stunts or races that the rider will exceed the design capacity of the frame or components, which may result in something on the bicycle breaking or bending, which could result in serious injury or death.

GEOMETRY KEY, FRAME SIZE SELECTION & COMPONENT SELECTION

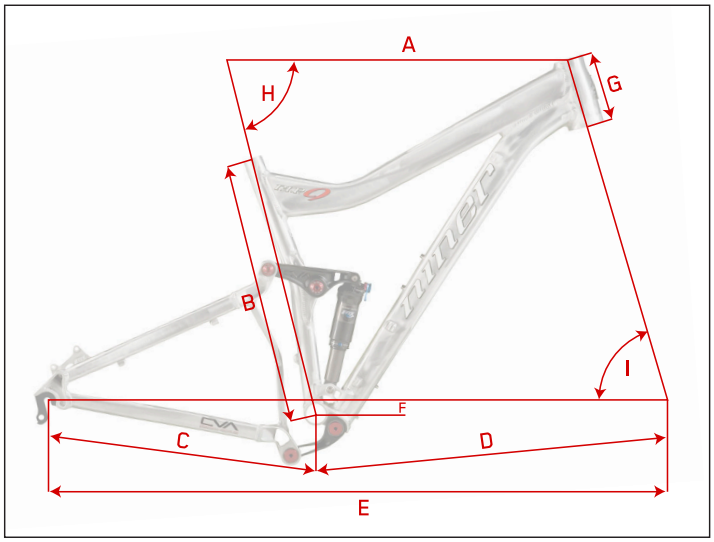

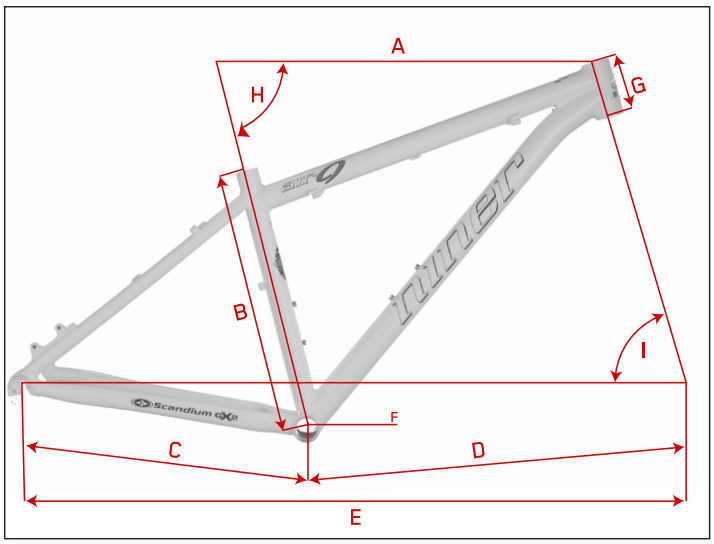

Geometry key:
(A) EFFECTIVE TOP TUBE LENGTH
(B) SEAT TUBE LENGTH
(C) CHAIN STAY LENGTH
(D) FRONT CENTER
(E) WHEELBASE
(F) BB DROP
(G) HEAD TUBE LENGTH
(H) SEAT TUBE ANGLE
(I) HEAD TUBE ANGLE

Does how I set up my Niner affect how my Niner will perform and/or handle?

Yes. All of the items in the list below (and myriad unlisted choices) can help you to customize your Niner's ride feel and fit:

- Frame size selection
- Fork Travel/Length
- Fork setup
- Wheel retention devices (Maxle/QR, etc.)
- Rear suspension set up
- Stem length & bar width
- Wheel & tire selection & set up

You have many choices as to what components you choose to use with your Niner bike. You also have many choices to make when it comes to how you set up these components. The choices you make can dramatically alter the character of your bicycle. In general, this is a good thing.

However, We cannot predict every new product that may come to the market and as such we cannot guarantee that every future product will be compatible with our frames.

For basic size recommendations see the chart below. For additional advice or for further info on component selection and set up, see your Niner dealer.

HEIGHT RECOMMENDATION			
SMALL	MEDIUM	LARGE	XL
5'3"-5'9" 1.6-1.75m	5'8"-6' 1.73-1.83m	5'11"-6'3" 1.8-1.91m	6'3"-6'7" 1.91-2.01m

GEOMETRY & SPECIFICATIONS: W.F.O. 9

W.F.O. 9	TT LENGTH 140 / 160*	SEAT TUBE LENGTH	CHAINSTAY LENGTH	FRONT CENTER 140 / 160*	WHEEL BASE 140 / 160*	BB DROP 140 / 160*	HEAD TUBE LENGTH	HEAD TUBE ANGLE 140 / 160*	SEAT TUBE ANGLE 140 / 160*	STAND OVER HEIGHT 140 / 160*
Small (inches)	23.1 / 23.3	16	17.9	26.6 / 26.9	44.5 / 44.7	0.9 / 0.6	4.7	69 / 68	74 / 73	28.2 / 28.5
Small (mm)	586 / 590	406	455	675 / 682	1129 / 1136	22 / 14	120	69 / 68	74 / 73	716 / 724
Medium (inches)	23.75 / 23.9	18	17.9	27.7 / 28	45.6 / 45.9	0.9 / 0.6	4.7	69 / 68	74 / 73	29.5 / 29.9
Medium (mm)	603 / 607	457	455	703 / 710	1158 / 1165	22 / 14	120	69 / 68	74 / 73	750 / 759
Large (inches)	24.5 / 24.7	20	17.9	28.5 / 28.8	46.4 / 46.7	0.9 / 0.6	5.1	69 / 68	74 / 73	31 / 31.3
Large (mm)	622 / 626	508	455	723 / 730	1177 / 1185	22 / 14	130	69 / 68	74 / 73	786 / 794
XL (inches)	25.25 / 25.4	22	17.9	28.8 / 29.1	46.7 / 47	0.9 / 0.6	5.7	69 / 68	74 / 73	32.5 / 32.8
XL (mm)	641 / 645	558	455	731 / 738	1186 / 1193	22 / 14	145	69 / 68	74 / 73	825 / 833

* Measurements are shown as they would be with either a 140mm and 160mm fork length. This is to help you take into account how fork length affects bike geometry.

SPECIFICATIONS & COMPATIBILITY:

- 30.9mm seatpost size, 350mm length recommended
- 34.9 seat collar size (not included)
- "D" mount direct high mount front derailleur, bottom pull
- 1.125"-1.5" taper head tube with "inset or zero stack" style headset, 44mm upper, 56mm lower (headset not included)
  Cane Creek standard description: ZS44/28.6|ZS56/40
- Small, Medium, Large, and XL have one inner triangle bottle mount
- Replaceable drop outs on both sides for axle options:
  - Comes with 135mm QR rear spacing
  - Optional 135mm x 12mm thru axle MAXLE upgrade
  - Coming soon: optional 142mm x 12mm thru axle upgrade

- Available with 150x12 Maxle rear triangle
- Shock Length: 7.875" (200mm)
- Shock Stroke: 2.25" (57mm)
- Shock hardware: 21.86mm x 6mm on both ends
- Six sealed cartridge bearings, size 28x15x7
- Two sealed cartridge bearings, size 24x12x6 seat stay yoke pivot
- Alloy Hardware (shares pivot axles and spacers with R.I.P. 9)
- Can fit up to a 2.5" tire (tire size varies by brand, some tires may not fit)
- Compatible with 2x systems from SRAM and SHIMANO, however certain gear sizes will not fit.
- SRAM recommended 2x front chainring configs: 26/39 or lower
- SHIMANO recommended 2x front chainring configs: 28/40
- Shock SAG 25% (which will move the o-ring 14.5mm down the shaft)
- ISCG tabs (original, pre-05 ISCG standard)
- Hammerschmidt compatible
- TT cable guides for use with dropper seat post

GEOMETRY & SPECIFICATIONS: R.I.P. 9

R.I.P. 9	TT LENGTH 120 / 140*	SEAT TUBE LENGTH	CHAINSTAY LENGTH	FRONT CENTER 120 / 140*	WHEELBASE 120 / 140*	BB DROP 120 / 140*	HEAD TUBE LENGTH	HEAD TUBE ANGLE 120 / 140*	SEAT TUBE ANGLE 120 / 140*	STANDOVER HEIGHT 120 / 140*
Small (inches)	23.1 / 23.3	16	17.9	26 / 26.2	43.9 / 44.1	1.1 / 0.8	4.5	70.5 / 69.5	73.5 / 72.5	27.8 / 28.1
Small (mm)	586 / 590	406	455	660 / 666	1113 / 1120	29 / 21	115	70.5 / 69.5	73.5 / 72.5	704 / 713
Medium (inches)	23.75 / 23.9	18	17.9	26.7 / 26.9	44.5 / 44.8	1.1 / 0.8	4.7	70.5 / 69.5	73.5 / 72.5	29.2 / 29.5
Medium (mm)	603 / 607	457	455	677 / 683	1130 / 1137	29 / 21	120	70.5 / 69.5	73.5 / 72.5	740 / 749
Large (inches)	24.5 / 24.6	20	17.9	27.7 / 27.9	45.5 / 45.8	1.1 / 0.8	5.1	70.5 / 69.5	74 / 73	30.6 / 30.9
Large (mm)	622 / 626	508	455	702 / 708	1156 / 1163	29 / 21	130	70.5 / 69.5	74 / 73	776 / 784
XL (inches)	25.25 / 25.4	22	17.9	28.4 / 28.7	46.3 / 46.6	1.1 / 0.8	5.7	70.5 / 69.5	74 / 73	32.1 / 32.4
XL (mm)	641 / 64	558	455	722 / 728	1176 / 1183	29 / 21	145	70.5 / 69.5	74 / 73	815 / 822

* Measurements are shown as they would be with either a 120mm and 140mm travel fork. This is to help you take into account how fork length affects bike geometry.

SPECIFICATIONS & COMPATIBILITY:

- 30.9mm seatpost size, 350mm length recommended
- 34.9 seat collar size (not included)
- 34.9 Front Derailleur size, high mount, bottom pull.
- 1.125"-1.5" taper head tube with "inset or zero stack" style headset, 44mm upper, 56mm lower (headset not included)
  Cane Creek standard description: ZS44/28.6|ZS56/40
- Small, Medium, Large, and XL have one inner triangle bottle mount and one under the DT bottle mount (Small size has limited inner triangle capacity, some bottles may not fit)
- Replaceable drop outs on both sides for axle options:
  - Comes with 135mm QR rear spacing
  - Optional 135mm x 12mm thru axle MAXLE upgrade
  - Coming soon: optional 142mm x 12mm thru axle upgrade

- Shock Length: 7.875" (200mm)
- Shock Stroke: 2" (50mm)
- Shock hardware: 21.86mm x 6mm on both ends
- Six sealed cartridge bearings, size 28x15x7
- Two sealed cartridge bearings, size 24x12x6 seat stay yoke pivot
- Alloy Hardware (shares pivot axles and spacers with W.F.O. 9)
- Can fit up to a 2.5" tire (tire size varies by brand, some tires may not fit)
- Compatible with 2x systems from SRAM and SHIMANO, however certain gear sizes will not fit.
- SRAM recommended 2x front chainring configs: 26/39 or lower
- SHIMANO recommended 2x front chainring configs: 28/40• Shock SAG 25% (which will move the o-ring 12.5mm down the shaft)
- TT cable guides for use with dropper seat post

GEOMETRY & SPECIFICATIONS: JET 9

JET 9	TT LENGTH 80 / 100*	SEAT TUBE LENGTH	CHAINSTAY LENGTH	FRONT CENTER 80 / 100*	WHEELBASE 80 / 100*	BB DROP 80 / 100*	HEAD TUBE LENGTH	HEAD TUBE ANGLE 80 / 100*	SEAT TUBE ANGLE 80 / 100*	STANDOVER HEIGHT 80 / 100*
Small (inches)	23.1 / 23.3	16	17.7	25 / 25.2	42.6 / 42.9	1.4 / 1.1	4.5	72 / 71	73.5 / 72.5	27.3 / 27.6
Small (mm)	586 / 590	406	450	634 / 640	1082 / 1088	35 / 27	115	72 / 71	73.5 / 72.5	692 / 700
Medium (inches)	23.75 / 23.9	18	17.7	25.6 / 25.9	43.3 / 43.5	1.4 / 1.1	4.7	72 / 71	73.5 / 72.5	28.6 / 28.9
Medium (mm)	603 / 607	457	450	651 / 656	1098 / 1105	35 / 27	120	72 / 71	73.5 / 72.5	726 / 734
Large (inches)	24.5 / 24.6	20	17.7	26.6 / 26.8	44.3 / 44.5	1.4 / 1.1	5.1	72 / 71	74 / 73	30 / 30.4
Large (mm)	622 / 626	508	450	676 / 681	1124 / 1130	35 / 27	130	72 / 71	74 / 73	762 / 771
XL (inches)	25.25 / 25.4	22	17.7	27.4 / 27.6	45 / 45.3	1.4 / 1.1	5.7	72 / 71	74 / 73	31.6 / 31.9
XL (mm)	641 / 645	558	450	695 / 701	1143 / 1150	35 / 27	145	72 / 71	74 / 73	801 / 809

* Measurements are shown as they would be with either an 80 mm and 100mm travel fork. This is to help you take into account how fork length affects bike geometry.

SPECIFICATIONS & COMPATIBILITY:

- 30.9mm seatpost size, 350mm length recommended
- 34.9 seat collar size (not included)
- 34.9 Front Derailleur size, high mount, bottom pull
- 1.125”-1.5” taper head tube with “inset or zero stack” style headset, 44mm upper, 56mm lower (headset not included)
  Cane Creek standard description: ZS44/28.6|ZS56/40
- Small, Medium, Large, and XL have one inner triangle bottle mount and one under the DT bottle mount. (Small size has limited inner triangle capacity, some bottles may not fit)
- Rear Triangle is 135mm QR rear spacing
- Shock Length: 6.5” (165mm)
- Shock Stroke: 1.5” (37mm)
- Shock hardware: 21.86mm x 6mm on both ends
- Eight sealed cartridge bearings, size 24x12x6
- Alloy Hardware
- Can fit up to a 2.5” tire (tire size varies by brand, some tires may not fit)
- Compatible with 2x systems from SRAM and SHIMANO, however certain gear sizes will not fit.
- SRAM recommended 2x front chainring configs: 26/39 or lower
- SHIMANO recommended 2x front chainring configs: 28/40• Shock SAG 25% (which will move the o-ring 9mm down the shaft)

GEOMETRY & SPECIFICATIONS: AIR 9 CARBON

AIR 9 CYA **	TT LENGTH 80 / 100*	SEAT TUBE LENGTH	CHAINSTAY LENGTH	FRONT CENTER 80 / 100*	WHEELBASE 80 / 100*	BB DROP 80 / 100*	HEAD TUBE LENGTH	HEAD TUBE ANGLE 80 / 100*	SEAT TUBE ANGLE 80 / 100*	STANDOVER HEIGHT 80 / 100*
Small (inches)	23.1 / 23.2	15.5	17.3	25.5 / 25.7	42.5 / 42.7	2.4 / 2.1	3.9	71 / 70	74 / 73	27.8 / 28
Small (mm)	586 / 589	393	439	646 / 651	1078 / 1085	61 / 53	100	71 / 70	74 / 73	705 / 710
Medium (inches)	23.75 / 23.9	16.5	17.3	25.7 / 25.9	42.7 / 43	2.4 / 2.1	4.3	72 / 71	74 / 73	28.6 / 28.8
Medium (mm)	603 / 606	419	439	653 / 657	1084 / 1091	61 / 53	110	72 / 71	74 / 73	727 / 732
Large (inches)	24 / 24.6	19	17.3	26.5 / 26.7	43.5 / 43.7	2.4 / 2.1	4.9	72 / 71	74 / 73	30.7 / 30.9
Large (mm)	622 / 625	482	439	672 / 677	1104 / 1110	61 / 54	125	72 / 71	74 / 73	780 / 786
XL (inches)	25.25 / 25.4	21	17.3	27.3 / 27.4	44.3 / 44.5	2.4 / 2.1	5.7	72 / 71	74 / 73	32.4 / 32.6
XL (mm)	641 / 644	533	439	692 / 697	1124 / 1130	61 / 54	145	72 / 71	74 / 73	823 / 829

* Measurements are shown as they would be with either an 80 mm and 100mm travel fork. This is to help you take into account how fork length affects bike geometry.

** Geometry based on BB on CENTER AXIS, EBB will change geometry depending on position.

SPECIFICATIONS & COMPATIBILITY:

- Can be run with Bio-Centric EBB for SS mode or as geared bike
- The Niner EBB is designed for use with external bearing cranksets only.
- 73mm BB width with all inserts
- 31.6mm seat post size, 400mm recommended
- 34.9mm front derailleur size, high mount bottom pull
- 34.9mm seat clamp size
- 1.125”-1.5” taper head tube with integrated (Campy style) headset (FSA headset included) Cane Creek standard description: IS42/28.6|IS52/40
- Small and Medium have one inner triangle bottle mount and one under the downtube bottle mount
- Large and XL have two inner triangle bottle mounts
- Replaceable derailleur hanger or SS insert
- Geared version comes with cable routing chuck & bolt, titanium chain drop and chain suck protection pieces, derailleur hanger, and chainstay protector
- When purchased with a geared set-up, comes with one set of CYA cups of your choice for geared set-up: threaded Shimano, press fit 92, BB30 or Press Fit 30. See CYA Chart for more CYA system information.
- Frame comes with SS insert in drop out and 3M helicoptor tape under DT
- Magnesium head badge
- 135mm QR rear spacing
- Can fit up to a 2.4” tire (tire size varies by brand, some tires may not fit)
- Compatible with 2x systems from SRAM and SHIMANO, however certain gear sizes will not fit.
- SRAM recommended 2x front chainring configs: 26/39 or lower
- SHIMANO recommended 2x front chainring configs: 28/40

GEOMETRY & SPECIFICATIONS: AIR 9

AIR 9	TT LENGTH 80 / 100*	SEAT TUBE LENGTH	CHAINSTAY LENGTH	FRONT CENTER 80 / 100*	WHEELBASE 80 / 100*	BB DROP 80 / 100*	HEAD TUBE LENGTH	HEAD TUBE ANGLE 80 / 100*	SEAT TUBE ANGLE 80 / 100*	STANDOVER HEIGHT 80 / 100*
Small (inches)	23.1 / 23.2	15.5	17.3	25.6 / 25.8	42.6 / 42.9	2.4 / 2.1	4.1	71 / 70	74 / 73	28.3 / 28.5
Small (mm)	587 / 590	394	439	650 / 655	1082 / 1088	62 / 54	105	71 / 70	74 / 73	719 / 724
Medium (inches)	23.8 / 23.9	16.5	17.3	25.8 / 26.0	42.8 / 43.1	2.4 / 2.1	4.3	72 / 71	74 / 73	29.1 / 29.3
Medium (mm)	603 / 607	419	439	656 / 660	1088 / 1094	62 / 54	110	72 / 71	74 / 73	739 / 744
Large (inches)	24.5 / 24.6	19.0	17.3	26.6 / 26.8	43.6 / 43.9	2.4 / 2.1	4.9	72 / 71	74 / 73	31.1 / 31.3
Large (mm)	622 / 626	483	439	675 / 680	1107 / 1114	62 / 54	125	72 / 71	74 / 73	790 / 796
XL (inches)	25.3 / 25.4	21.0	17.3	27.4 / 27.5	44.4 / 44.6	2.4 / 2.1	5.7	72 / 71	74 / 73	32.7 / 33.0
XL (mm)	641 / 645	533	439	695 / 700	1127 / 1134	62 / 54	145	72 / 71	74 / 73	831 / 837

* Measurements are shown as they would be with either an 80 mm and 100mm travel fork. This is to help you take into account how fork length affects bike geometry.

SPECIFICATIONS & COMPATIBILITY:

- 73mm BB width
- 31.6mm seatpost size, 400mm recommended
- 34.9mm seat collar size (not included)
- 34.9mm front derailleur, low mount, top pull
- standard 1.125" external bearing headset (not included). Cane Creek standard description: EC34/28.6|EC34/30
- Replaceable derailleur hanger
- Size Small has one inner triangle bottle mount and one under the downtube bottle mount
- Size Medium, Large and XL have two inner triangle bottle mounts
- 135mm QR rear spacing
- Stainless steel laser cut head badge
- Can fit up to a 2.4" tire (tire size varies by brand, some tires may not fit)
- Compatible with 2x systems from SRAM and SHIMANO, however certain gear sizes will not fit.
- SRAM recommended 2x front chainring configs: 26/39 or lower
- SHIMANO recommended 2x front chainring configs: 28/40

GEOMETRY & SPECIFICATIONS: E.M.D. 9

E.M.D. 9	TT LENGTH 80 / 100*	SEAT TUBE LENGTH	CHAINSTAY LENGTH	FRONT CENTER 80 / 100*	WHEELBASE 80 / 100*	BB DROP 80 / 100*	HEAD TUBE LENGTH	HEAD TUBE ANGLE 80 / 100*	SEAT TUBE ANGLE 80 / 100*	STANDOVER HEIGHT 80 / 100*
Small (inches)	23.1 / 23.2	15.5	17.3	25.6 / 25.8	42.6 / 42.9	2.4 / 2.1	4.1	71 / 70	74 / 73	28.3 / 28.5
Small (mm)	587 / 590	394	439	650 / 655	1082 / 1088	62 / 54	105	71 / 70	74 / 73	719 / 724
Medium (inches)	23.8 / 23.9	16.5	17.3	25.8 / 26.0	42.8 / 43.1	2.4 / 2.1	4.3	72 / 71	74 / 73	29.1 / 29.3
Medium (mm)	603 / 607	419	439	656 / 660	1088 / 1094	62 / 54	110	72 / 71	74 / 73	739 / 744
Large (inches)	24.5 / 24.6	19.0	17.3	26.6 / 26.8	43.6 / 43.9	2.4 / 2.1	4.9	72 / 71	74 / 73	31.1 / 31.3
Large (mm)	622 / 626	483	439	675 / 680	1107 / 1114	62 / 54	125	72 / 71	74 / 73	790 / 796
XL (inches)	25.3 / 25.4	21.0	17.3	27.4 / 27.5	44.4 / 44.6	2.4 / 2.1	5.7	72 / 71	74 / 73	32.7 / 33.0
XL (mm)	641 / 645	533	439	695 / 700	1127 / 1134	62 / 54	145	72 / 71	74 / 73	831 / 837

* Measurements are shown as they would be with either an 80 mm and 100mm travel fork. This is to help you take into account how fork length affects bike geometry.

SPECIFICATIONS & COMPATIBILITY:

- 73mm BB width
- 31.6mm seatpost size, 400mm recommended
- 34.9mm seat collar size (not included)
- 34.9mm front derailleur, low mount, top pull
- standard 1.125" external bearing headset (not included). Cane Creek standard description: EC34/28.6|EC34/30
- Replaceable derailleur hanger
- Size Small has one inner triangle bottle mount and one under the downtube bottle mount
- Size Medium, Large and XL have two inner triangle bottle mounts
- 135mm QR rear spacing
- Stainless steel laser cut head badge
- Can fit up to a 2.4" tire (tire size varies by brand, some tires may not fit)
- Compatible with 2x systems from SRAM and SHIMANO, however certain gear sizes will not fit.
- SRAM recommended 2x front chainring configs: 26/39 or lower
- SHIMANO recommended 2x front chainring configs: 28/40

GEOMETRY & SPECIFICATIONS: S.I.R. 9

S.I.R. 9**	TT LENGTH 80 / 100*	SEAT TUBE LENGTH	CHAINSTAY LENGTH	FRONT CENTER 80 / 100*	WHEELBASE 80 / 100*	BB DROP 80 / 100*	HEAD TUBE LENGTH	HEAD TUBE ANGLE 80 / 100*	SEAT TUBE ANGLE 80 / 100*	STANDOVER HEIGHT 80 / 100*
Small (inches)	23.1 / 23.2	15.5	17.3	25.3 / 25.5	42.3 / 42.5	2.4 / 2.1	3.5	71.5 / 70.5	74 / 73	27.8 / 28
Small (mm)	586 / 590	393	439	641 / 646	1073 / 1079	61 / 53	90	71.5 / 70.5	74 / 73	706 / 710
Medium (inches)	23.75 / 23.9	16.5	17.3	25.7 / 25.9	42.7 / 43	2.4 / 2.1	3.9	72 / 71	74 / 73	28.6 / 28.8
Medium (mm)	603 / 606	419	439	653 / 658	1084 / 1091	61/ 53	100	72 / 71	74 / 73	727 / 732
Large (inches)	24.5 / 24.6	19	17.3	26.5 / 26.7	43.5 / 43.7	2.4 / 2.1	4.3	72 / 71	74 / 73	30.7 / 30.9
Large (mm)	622 / 625	482	439	672 / 677	1104 / 1110	61/ 53	110	72 / 71	74 / 73	779 / 785
XL (inches)	25.25 / 25.4	21.5	17.3	27.3 / 27.4	44.3 / 44.5	2.4 / 2.1	5.1	72 / 71	74 / 73	32.8 / 33
XL (mm)	641 / 644	546	439	692 / 697	1124 / 1130	61/ 53	130	72 / 71	74 / 73	832 / 838

* Measurements are shown as they would be with either an 80 mm and 100mm travel fork. This is to help you take into account how fork length affects bike geometry.

** Geometry based on BB on CENTER AXIS, EBB will change geometry depending on position.

SPECIFICATIONS & COMPATIBILITY:

- 73mm BB width
- 27.2mm seatpost size, 400mm recommended
- 29.6mm seat collar size (not included)
- 28.6mm front derailleur, low mount, bottom pull
- standard 1.125” external bearing headset (not included)
- Replaceable derailleur hanger or SS insert
- Size Small has one inner triangle bottle mount and one under the downtube bottle mount
- Sizes Medium, Large and XL have two inner triangle bottle mounts
- 135mm QR rear spacing
- Stainless Steel laser cut head badge
- Can fit up to a 2.4” tire (tire size varies by brand, some tires may not fit)
- Compatible with 2x systems from SRAM and SHIMANO, however certain gear sizes will not fit.
- SRAM recommended 2x front chainring configs: 26/39 or lower
- SHIMANO recommended 2x front chainring configs: 28/40
- The Niner EBB is designed for use with external bearing cranksets only.

GEOMETRY & SPECIFICATIONS: M.C.R. 9

M.C.R. 9	TT LENGTH 80 / 100*	SEAT TUBE LENGTH	CHAINSTAY LENGTH	FRONT CENTER 80 / 100*	WHEELBASE 80 / 100*	BB DROP 80 / 100*	HEAD TUBE LENGTH	HEAD TUBE ANGLE 80 / 100*	SEAT TUBE ANGLE 80 / 100*	STANDOVER HEIGHT 80 / 100*
Small (inches)	23.1 / 23.2	15.5	17.5	25.4 / 25.6	42.6 / 42.9	2.4 / 2.1	3.5	71.5 / 70.5	74 / 73	28.2 / 28.4
Small (mm)	586 / 589	393	445	644 / 649	1082 / 1089	60 / 52	90	71.5 / 70.5	74 / 73	715 / 720
Medium (inches)	23.75 / 23.9	16.5	17.5	25.8 / 26	43.1 / 43.3	2.4 / 2.1	3.9	72 / 71	74 / 73	29 / 29.2
Medium (mm)	603 / 606	419	445	656 / 660	1094 / 1100	60 / 52	100	72 / 71	74 / 73	736 / 741
Large (inches)	24.5 / 24.6	19	17.5	26.6 / 26.8	43.8 / 44.1	2.4 / 2.1	4.3	72 / 71	74 / 73	31 / 31.3
Large (mm)	622 / 625	482	445	675 / 680	1113 / 1120	60 / 52	110	72 / 71	74 / 73	788 / 794
XL (inches)	25.25 / 25.4	21.5	17.5	27.4 / 27.6	44.6 / 44.9	2.4 / 2.1	5.1	72 / 71	74 / 73	33 / 33.3
XL (mm)	641 / 644	546	445	695 / 699	1133 / 1139	60 / 52	130	72 / 71	74 / 73	839 / 846

* Measurements are shown as they would be with either an 80 mm and 100mm travel fork. This is to help you take into account how fork length affects bike geometry.

SPECIFICATIONS & COMPATIBILITY:

- 73mm BB width
- 27.2mm seatpost size, 400mm recommended
- 29.6mm seat collar size (not included)
- 28.6mm front derailleur, low mount, bottom pull
- standard 1.125” external bearing headset (not included)
  Cane Creek standard description: EC34/28.6|EC34/30
- Replaceable derailleur hanger
- Size Small has one inner triangle bottle mount and one under the downtube bottle mount
- Size Medium, Large and XL have two inner triangle bottle mounts
- 135mm QR rear spacing
- Stainless steel laser cut head badge
- Can fit up to a 2.4” tire (tire size varies by brand, some tires may not fit)
- Compatible with 2x systems from SRAM and SHIMANO, however certain gear sizes will not fit.
- SRAM recommended 2x front chainring configs: 26/39 or lower
- SHIMANO recommended 2x front chainring configs: 28/40

GEOMETRY & SPECIFICATIONS: ONE 9

ONE 9	TT LENGTH 80 / 100*	SEAT TUBE LENGTH	CHAINSTAY LENGTH	FRONT CENTER 80 / 100*	WHEELBASE 80 / 100*	BB DROP 80 / 100*	HEAD TUBE LENGTH	HEAD TUBE ANGLE 80 / 100*	SEAT TUBE ANGLE 80 / 100*	STANDOVER HEIGHT 80 / 100*
Small (inches)	23.1 / 23.2	15.5	17.3	25.5 / 25.6	42.4 / 42.7	2.4 / 2.1	3.1	71 / 70	74 / 73	27.8 / 28
Small (mm)	586 / 589	393	439	646 / 651	1077 / 1084	61 / 53	80	71 / 70	74 / 73	705 / 710
Medium (inches)	23.75 / 23.9	16.5	17.3	25.7 / 25.9	42.7 / 42.9	2.4 / 2.1	3.5	72 / 71	74 / 73	28.6 / 28.8
Medium (mm)	603 / 606	419	439	653 / 657	1084 / 1090	61 / 53	90	72 / 71	74 / 73	727 / 731
Large (inches)	24.5 / 24.6	18.5	17.3	26.5 / 26.7	43.5 / 43.7	2.4 / 2.1	4.1	72 / 71	74 / 73	30.3 / 30.5
Large (mm)	622 / 625	469	439	672 / 677	1104 / 1110	61 / 54	105	72 / 71	74 / 73	769 / 774
XL (inches)	25.25 / 25.4	21	17.3	27.2 / 27.4	44.2 / 44.5	2.4 / 2.1	4.7	72 / 71	74 / 73	32.3 / 32.6
XL (mm)	641 / 644	533	439	692 / 696	1123 / 1130	61 / 54	120	72 / 71	74 / 73	820 / 826

* Measurements are shown as they would be with either an 80 mm and 100mm travel fork. This is to help you take into account how fork length affects bike geometry.

SPECIFICATIONS & COMPATIBILITY:

- 73mm BB width
- 31.6mm seatpost size, 400mm recommended
- 34.9mm seat collar size (not included)
- standard 1.125” external bearing headset (not included)
  Cane Creek standard description: EC34/28.6|EC34/30
- Dedicated singlespeed drop outs
- Size Small has one inner triangle bottle mount and one under the downtube bottle mount
- Size Medium, Large and XL have two inner triangle bottle mounts
- 135mm QR rear spacing
- Stainless Steel laser cut head badge
- Can fit up to a 2.4” tire (tire size varies by brand, some tires may not fit)
- The Niner EBB is designed for use with external bearing cranksets only.

ABOUT CVA™ SUSPENSION - (U.S. PATENT NO. 7,934,739)

1. CVA™ IS NOW PATENTED (U.S. PATENT NO. 7,934,739)

CVA™ is an award-winning suspension design and now it is recognized with a US Patent.

2. THE ONLY 29ER SPECIFIC SUSPENSION DESIGN

CVA™ is the only suspension designed with 29ers in mind. For those seeking big wheels and CVA™ performance, Niner is the way to go. You won't find this design on other bikes.

3. EFFICIENT PEDALING IN ALL CHAINRINGS

CVA™ is designed to be efficient in all chainrings. Because of the location of the lower pivot (under the BB) chain torque effectively isolates and cancels out the forces acting to create inefficiency in pedal stroke.

4. POSITIVELY REVIEWED - AROUND THE WORLD

CVA™ equipped Niner Bikes have garnered praise on the forums and in magazines around the world. Real rider experience supports our system's superiority for your 29er experience. See our website or the next page for more reviews.

ABOUT CVA™ SUSPENSION:
Niner's own Constantly Varying Arc, or CVA™, suspension design is not just another version of the same old thing. It's unique to Niner, designed in-house, specifically for 29" wheels.

Although CVA™ does resemble some of the other parallel link bikes, CVA™ works very differently to isolate pedaling forces and remain fully active under all conditions. Many current suspension designs, especially some parallel link suspension designs, maximize efficiency by concentrating their 'instant center' pivot location at or around the middle chainring. These designs assume that most of your pedaling will be done in the middle chainring and so are designed around this effective pivot location. This also means that there is some compromise to the suspension's pedalability when NOT in the middle chainring (or when using a 2x10 set up). The better the design, the less noticeable these compromises are.

In order to isolate pedaling forces in a broader range of gearing choices, the CVA's™ 'instant center' location is in front of the drivetrain. With the lower pivot under the bottom bracket, the force at the rear axle resulting from chain tension pulls the two linkages in opposite directions in all gear choices, effectively isolating the drivetrain from the rear triangle. In other words, when a rider cranks on the pedals, the chain is trying to pull the lower link down and away from the bottom bracket, and the upper link in its regular rotational path. Since the rear triangle is one piece, the result of these opposing forces cancels each other out, leaving the only outlet for chain-induced torque being rotation of the rear wheel, where it's most wanted.

Past the rearward-most position at sag, the axle path moves in towards the bike at a gradual, constantly varying arc, which insures that there is minimal chain growth throughout the length of travel. This also means minimal pedal feed back in the drivetrain while cycling the suspension, again, essentially isolating it from the fully active movement of the suspension design.

Another key component to CVA™ suspension's active design is the low leverage ratio of shock stroke to suspension movement. This low leverage ratio decreases the amount of air or spring weight needed for any rider weight, which translates to smoother, more effective damping and less drag on the seals.

Ultimately, there are many variables in suspension – we believe that we have created a strong, 29er specific system, and that the best way to test it is to go out and ride a Niner full suspension bike.

WWW.NINERBIKES.COM/DEMO

ABOUT CVA™ SUSPENSION - (U.S. PATENT NO. 7,934,739)

CONSTANTLY VARYING ARC
SUSPENSION TECHNOLOGY U.S. PAT. NO. 7,934,739

This drawing shows the relationship between the bottom bracket and the center axle line. The red line represents equal 13.2" bottom bracket height on both 26" and 29" MTBs. The blue line represents the center line of the axle on each bike.
Note: all suspension designs up until the development of CVA™ were designed around 26" wheel and the 26" wheel bottom bracket to axle center line relationship.

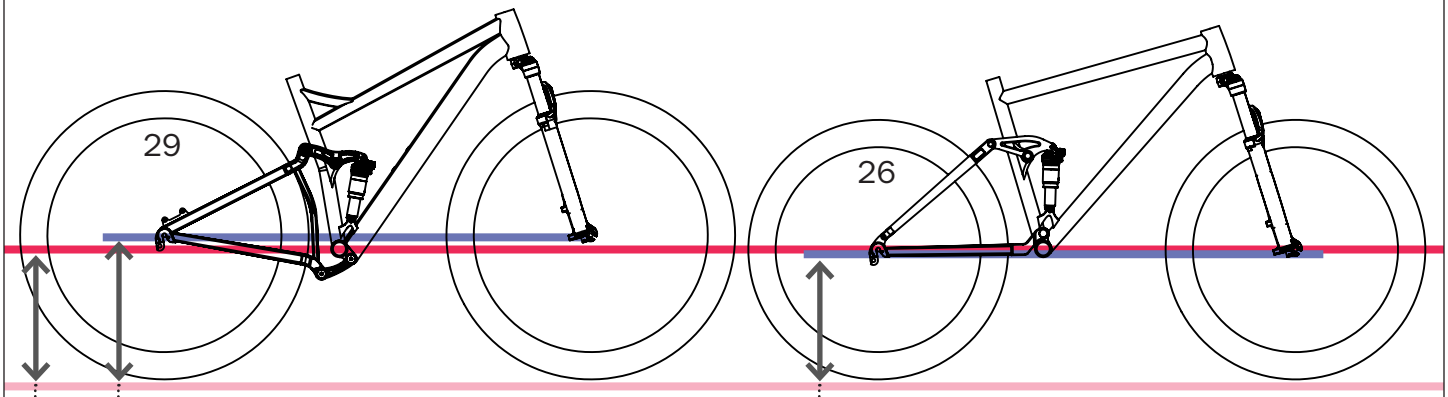

335MM 13.2IN | 370MM 14.5IN — ON A 29ER WITH A BOTTOM BRACKET HEIGHT OF 13.2 INCHES, THE BOTTOM BRACKET WILL BE 1.3" **LOWER** THAN THE AXLE CENTER LINE

333MM 13.0IN — ON A 26" BIKE WITH A BOTTOM BRACKET HEIGHT OF 13.2 INCHES, THE BOTTOM BRACKET WILL BE 0.2" **HIGHER** THAN THE AXLE CENTER LINE

SAG SET UP FOR NINER FULL SUSPENSION MODELS

MODEL	SHOCK STROKE LENGTH	20% SAG	25% SAG	30% SAG
JET 9	1.5"/37mm	0.3"/7mm	0.38"/9mm	0.45"/11mm
RIP 9	2"/50mm	0.4"/10mm	0.5"/12.5mm	0.6"/15mm
WFO 9	2.25"/57mm	0.5"/11mm	0.6"/14.5mm	0.7"/17mm

Sag set up is critical to correct rear suspension function. Niner recommends between 20-30% sag on all models. As travel increases into the more extreme style frames, more sag can be used (in other words, 30% on the WFO 9 is a good amount of sag). Niner recommends starting with 25% sag on each model. The chart below will give you measurements for each Niner full suspension model and is a great starting point to rear suspension setup. Niner recommends consulting your local bicycle dealer for help in understanding suspension setup. While sag is an important measurement to insure your suspension is setup correctly, there are many more adjustments that can be made to your suspension components to insure that your're getting the most out of your suspension. Please consult the owner's manuals of those suspension components for a full understanding of the different adjustments that can be made.

To adjust sag with an air sprung shock, it will require the use of a specific 'shock pump'. Please insure that you have purchased the correct pump from your local bike shop. On the rear shock, there is a rubber o-ring that will be pushed on the stancion by the shock body. This o-ring will indicate how much sag you have in your rear suspension. Insure that the o-ring is pushed all the way up against the shock body, mount your bike with your full riding gear on (to mimic riding weight) and without bouncing get off your bike. The distance the o-ring traveled from the shock body is the amount of 'sag' you have on your system. Consult the graph below for proper measurements of correct sag per model. With your shock pump, either increase or decrease pressure in the air spring to reach the desired sag amount.

HEADSET SPECIFICATIONS

MODEL	YEAR	HEADSET SPEC	OPTIONS	ANGLESET COMPATIBILITY	ANGLESET OPTIONS	OLD HEADSET NOMENCLATURE
ONE 9	2005-2011	EC34/28.6|EC34/30				Standard 1 1/8" threadless headset
AIR 9	2006-2011	EC34/28.6|EC34/30				Standard 1 1/8" threadless headset
EMD 9	2006-2011	EC34/28.6|EC34/30				Standard 1 1/8" threadless headset
SIR 9	2006-2011	EC34/28.6|EC34/30				Standard 1 1/8" threadless headset
MCR 9	2006-2011	EC34/28.6|EC34/30				Standard 1 1/8" threadless headset
Air 9 Carbon	2009-Present	IS42/28.6|IS52/40	IS42/28.6|IS52/30**			Integrated 1 1/8" upper/1.5" lower
Jet 9	2010	IS42/28.6|IS52/40	IS42/28.6|IS52/30**			Integrated 1 1/8" upper/1.5" lower
Jet 9	2011	ZS44/28.6|ZS56/40	ZS44/28.6|ZS56/30**	ZS44/28.6|ZS56/30***	ZS44/28.6|EC56/40†	Internal or 'Inset' 1 1/8" upper/1.5" lower
RIP 9	2006-2008	EC34/28.6|EC34/30				Standard 1 1/8" threadless headset
RIP 9	2009-2010	IS42/28.6|IS52/40	IS42/28.6|IS52/30**			Integrated 1 1/8" upper/1.5" lower
RIP 9	2011	ZS44/28.6|ZS56/40	ZS44/28.6|ZS56/30**	ZS44/28.6|ZS56/30***	ZS44/28.6|EC56/40†	Internal or 'Inset' 1 1/8" upper/1.5" lower
WFO 9	2009-2010	IS42/28.6|IS52/40	IS42/28.6|IS52/30**			Integrated 1 1/8" upper/1.5" lower
WFO 9	2011	ZS44/28.6|ZS56/40	ZS44/28.6|ZS56/30**	ZS44/28.6|ZS56/30***	ZS44/28.6|EC56/40†	Internal or 'Inset' 1 1/8" upper/1.5" lower

* lower external cup for using a taper steerer tube in a 44mm ID ZS head tube

** denotes the ability to run a straight 1 1/8” fork in our taper head tubes

*** CURRENT (as of 10/2010) availibility of angleset headsets require the use of straight 1 1/8” forks, offsets include 0, 0.5, 1, 1.5 degrees

†Availible next year, uses an external cup lower WITH a taper steerer tube, offsets include 0, 0.5, 1, 1.5 degrees

‡Availible next year, uses an external cup upper with a straight 1 1/8” fork, offsets include 0,0.5,1 degrees

ABOUT TAPERED HEADTUBES

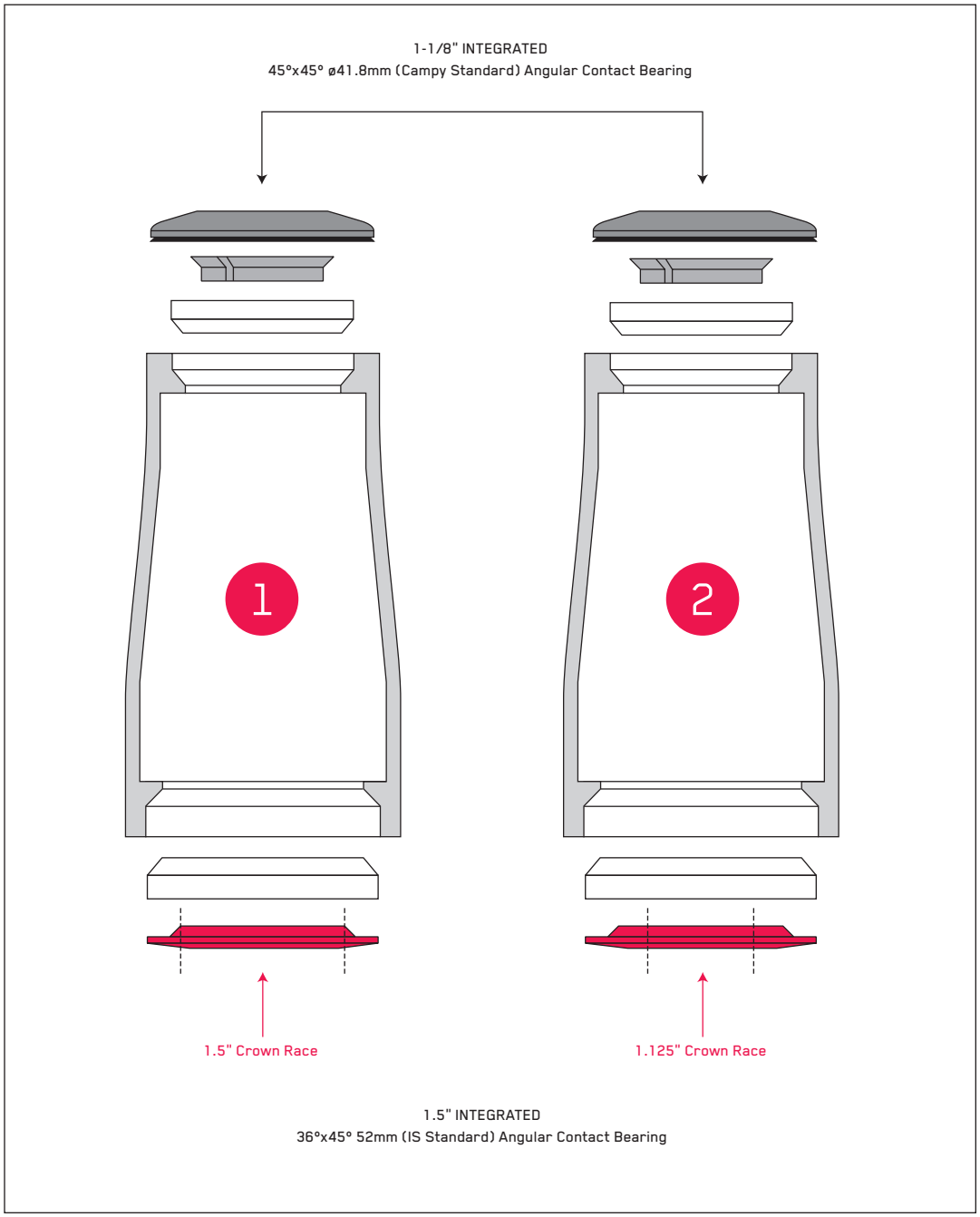

What's with that weird head tube?

Niner Jet 9, R.I.P. 9 and W.F.O. 9 frames are designed with a tapered head tube. What exactly does this mean?

We feel that this new standard offers so many advantages over a traditional headtube design that it's going to become the obvious choice for most riders. This design can be used with a matching tapered steerer fork (1) or paired with a traditional 1.125" steerer (2). We hope after familiarizing yourself with the tapered headtube you will agree that it does increase frame stiffness and strength via more tube contact area and increased diameter. Plus, it looks great.

The height of the new tapered headtube with headset installed is identical to our frames with traditional headtubes with a Chris King headset installed. No need to worry about a different stack height if you are using your old 1-1/8" fork.

The crown race is the only part that needs to be switched to use either a tapered steerer fork or a traditional 1-1/8" steerer fork.

Both types of crown race are available from the Niner store at www.ninerbikes.com.

RUNNING YOUR S.I.R. 9 AS A GEARED BIKE

Your S.I.R. 9 or Air 9 Carbon frame came shipped to you with the rear SS insert piece installed in the right side drop out. This alloy piece is designed to be used with the frame when running it as a singlespeed so there is no ugly derailleur hanger cluttering up the otherwise sleek look of a frame without gears, derailleurs, or cables.

When running the S.I.R. 9 or Air 9 Carbon as a geared bike, the singlespeed insert piece will need to be exchanged with the correct derailleur hanger (Included with the S.I.R. 9 frame, included with the Air 9 Carbon geared kit)

Derailleur hanger installation is simple. Change the hanger out so that you now have a place to bolt your rear derailleur to.

For the SIR 9 only, the EBB will also need to be adjusted for geared riding. Set the EBB in the 3:00 position (when looking at the EBB from the drive side, or right, of the frame). This should be the forward most position. This position ensures that the front derailleur achieves the best possible alignment with the chainrings.

Cable routing for the S.I.R. 9 is under the downtube. We choose this cable routing because it allows us to add a minimal number of cable stops, for a clean looking bike build. When routing the rear derailleur cable, it is important that you make sure to pass the cable through the small steel tube welded on the underside of the right chainstay. This ensures that the derailleur cable doesn't rub on the tire.

RUNNING YOUR AIR 9 CARBON AS A GEARED BIKE

⚠ Air 9 Carbon owners, stop assembling your bike and read this! If you're running your Air 9 Carbon as a singlespeed, simply follow the Bio-Centric EBB instructions. The steps below are for people setting up the Air 9 Carbon as a geared bicycle.

We know you're excited to get your new ride built. Carefully follow the instructions and you will get out on the trail sooner than if you have to redo everything.

Getting Started:

YOU WILL NEED:
- 3MM HEX WRENCH
- 4MM CABLE HOUSING
- 6 X CABLE HOUSING ENDS
- PROPER HEADSET PRESS
- TOOLS FOR INSTALLATION OF DERAILLEURS, SHIFTERS, CRANKS AND BOTTOM BRACKETS ACCORDING TO MANUFACTURERS' INSTRUCTIONS
- RECOMMENDED: DENTAL PIC OR OTHER SHARP, HOOKED INSTRUMENT

While this process is pretty straightforward, it may require a little patience on your part. Internal cable routing upon initial installation can take some pushing and prodding. We designed the Air 9 Carbon cable routing to be user friendly, but… **put on some music, grab a beer and just chill out**. We know you're excited to get it built, but think 'Zen and the Art of Cable Routing'.

Step by step instructions for Air 9 Carbon cable routing:

1. Install your headset, fork, stem, and handlebars as per the manufacturers' instructions.

2. Install your brakes, shifters and grips. Angle your brake levers and shifters in the correct position, so that when you cut the cable housing for the shifters going into the head badge, they are cut at the correct length.

3. Using 4mm shifter housing and a housing endcap on each end, cut the housing that goes from the shifters into the holes of the head badge.

RECOMMENDATION: we recommend, for better cable routing and improved shifting, that you cross the cables going into the head badge so that the REAR shifter cable goes into the LEFT side of the head badge and the front shifter cable goes into the RIGHT side of the head badge. Keep in mind LEFT side is NON-DRIVESIDE and RIGHT side is DRIVESIDE.

4. Run the front shifter cable through the head badge and snake the cable down the downtube. Do this step for JUST the front shifter cable and wait to do the rear shifter cable until these directions instruct you to. This will make it easier in the long run.

5. As you snake the front cable into the downtube (through the head badge), put a finger in the forward facing window in the bottom bracket and fish for the cable making its way down to you. Proper lighting and a hooked dental tool can make it MUCH easier to pull this cable through the window in the bottom bracket.

6. Pull the cable taut, which will cause the cable housing to seat inside the cable stop of the head badge. While holding onto the cable coming out of the bottom bracket, shift your front shifter a couple of times and ensure smooth operation of the front derailleur cable. Please note that the shifter cable housing will cause some 'stiffness' at the handlebars while the bike is on the stand.

7. Leave this cable dangling out of the bottom bracket.

RECOMMENDATION: mark this as your front derailleur cable with a color-coded piece of tape so that when you return to the bottom bracket to hook up the derailleurs, you know which cable goes where.

8. Repeat steps 4-7 for the rear derailleur.

9. Run 4mm cable HOUSING from the hole in the BACK of the chainstay FORWARD toward the bottom bracket. This is the easiest way to run the cable housing into the bottom bracket. You will need a piece of cable housing that is long enough to go from the stop in the cable shifting chuck to the stop on the rear derailleur. You MAY have to wiggle the cable around a bit to get it through various parts of the chainstay and into the bottom bracket area.

RECOMMENDATION: do not try to cut the EXACT length of this piece of cable housing yet. You can cut something slightly longer and trim as necessary.

10. Fish the cable housing out of the REAR window in the bottom bracket and angle this cable out of the bottom bracket area for easier access.

11. Install cable housing end onto the end of housing coming out of the bottom bracket. Ensure that the 'sheath' inside the derailleur cable housing is open and accessible for the cable to go into.

12. Using a 3mm hex wrench going through the drain hole in the bottom of the bottom bracket, install the cable guide 'chuck' into the top of the bottom bracket.

RECOMMENDATION: Install the REAR section of cable housing into the cable stop in the 'chuck' first and then bolt the chuck into the bottom bracket. TAKE CARE not to strip or cross thread the bolt going into the bottom bracket, as the tension from the rear section of cable housing may cause the 'chuck' to misalign the bolt.

13. Install the front and rear derailleur cables through their appropriate channels on the cable guide chuck. Take care to ensure that the front derailleur cable passes THROUGH the bridge that goes over the channel and that the rear derailleur cable goes into the cable housing on the cable housing stop of the chuck. The front derailleur cable will curve around the channel on the chuck and out the hole of the carbon frame. The rear derailleur cable will go through the housing and out the back of the bike. Pull both cables taut from their exits and ensure that the cables inside the bottom bracket area do not twist or kink.

14. Before bolting cables to derailleurs, grab the cables with your hands and pull them tight, then shift the shifters and ensure smooth operation of the shifting.

15. Install the rear derailleur as per the manufacturer's instructions.

(Continued Next Page)

RUNNING YOUR AIR 9 CARBON AS A GEARED BIKE (CONTINUED)

16. Cut the rear cable housing to the correct length.

⚠ WARNING: PULL THE CABLE ITSELF OUT OF THE HOUSING AT THE SHIFTER at least 5-6 inches before cutting the rear cable housing. If you cut the housing with the cable inside it all the way, you will need to replace your cable from your shifter down, and this will be a major pain in the butt.

RECOMMENDATION: Leave a little bit of a bend in the rear derailleur cable housing when you cut it to the correct length. When you install the chain and crankset, you will need to adjust the rear derailleur, and proper adjustment of the rear derailleur may require adjustment of the 'B' tension screw which MAY change the position of your derailleur body, which in turn will change the length of housing needed to reach the rear derailleur. Having a little bit of wiggle room here is not a bad thing.

17. Install a cable housing end on the rear derailleur housing and put it into the cable stop on the rear derailleur. Push the cable back through the housing and bolt it to the rear derailleur.

18. Visually inspect everything inside the bottom bracket area and again ensure proper shift performance before going to step 19. This is important since it will be the last time you will be able to see the bottom bracket area and cable routing chuck.

19. Install the proper CYA bottom bracket insert into your frame. USING A HEADSET PRESS, install ONE SIDE of the CYA insert at a time. This will ensure that the inserts are going into the frame straight and true. Press the inserts into the bottom bracket of the frame until they bottom out. Install bottom bracket as per manufacturer's instructions.

20. Mount the cranks and front derailleur as per the manufacturers' instructions. Double-check that you are using the correct front derailleur. The Air 9 Carbon requires a HIGH MOUNT, BOTTOM PULL front derailleur with a 34.9mm clamp.

21. Cut the chain to the correct length and install as per the manufacturer's instructions.

22. Ensure that your front shifter is released all the way and bolt the shifter cable to the front derailleur.

23. Adjust the derailleurs as per the manufacturers' instructions and complete assembly of your bike. You're now ready to ride!

CYA IDENTIFICATION GUIDE

BB SYSTEM	CYA INSERT	BOTTOM BRACKET EXAMPLE PHOTO	NOTES & COMPATIBILITY ISSUES
BB30 NINER PART # 49-134-10-00-20 C-CLIPS NOT NECESSARY FOR BB INSTALLATION			Compatible with all BB30 (30mm spindle) style cranks and bearings. Press CYA Inserts into frame, then install BB bearings as per manufactures recommendations, Do not use C-Clips that are supplied with bottom bracket. Install cranks per manufacturers instructions. NOTE: Do not confuse BB30 with SRAM Press Fit 30. The outer diameter of the BB bearings is different, so you must use the corresponding CYA cups.
SHIMANO BB92 **SRAM BB92** NINER PART # 49-135-10-00-20 BB90 AND BB92 ARE THE SAME STANDARD. BOTTOM BRACKETS COME WITH 2MM SPACER TO BE INSTALLED ON THE DRIVESIDE TO CONVERT BB90 TO BB92 STANDARD			Shimano MTB Press Fit Bottom Bracket for 92 or 89.5mm for Shimano HollowTech II MTB cranks. Set includes left and right hand cups, 2.5 mm spacer, inner cover, and inner O-rings. Compatible with 89.5 mm (with 2.5 mm spacer) and 92 mm shells. 41mm cup outer diameter. For cranks with integrated 24mm spindle. NOTE: These cups should be referred to as BB92 or BB89.5, which references the BB shell width (CYA cups are 89.5). BB90 is used exclusively on Trek frames where the bearing seats are molded directly into the carbon BB shell. For use on HollowTech-II cranks with integrated 24mm HT2 spindle. Press CYA Inserts into frame, then install Shimano BB and cranks per manufacturer's instructions.
			Truvativ/SRAM Press-Fit BB86/92 GXP Adapter Cups: For fitting SRAM and Truvativ GXP cranksets to frames with either a BB86-Road (86.5mm width) or BB92-MTB (89.5/92mm width) 41mm-ID press-fit, non-threaded bottom bracket shells (not for BB90-Trek, or BB30 systems). Includes 37x24x8mm bearing set with wave washer and bearing shields for use on Giga X Pipe cranks with integrated 24mm GXP spindle. The same CYA cups as above, but shown with the SRAM Press-Fit BB86/92 GXP Adapter Cups. For use with SRAM and Truvativ GXP cranksets. Press CYA Inserts into frame, then install GXP cups and cranks per manufactures instructions.
SRAM PRESS FIT 30BB NINER PART # 49-133-10-00-20			Compatible with all BB30 style cranks (30mm spindle) and SRAM PF30 BB. Press CYA Inserts into frame, then install PF30 cups and cranks per manufactures instructions. NOTE: Do not confuse BB30 with SRAM Press Fit 30. The outer diameter of the BB bearings is different, so you must use the corresponding CYA cups.
STANDARD THREADED BB SYSTEMS (EXTERNAL) ACCEPTS ANY 73MM WIDTH ENGLISH THREADED EXTERNAL BEARING BB SYSTEM. SHIMANO, TRUVATIVE, CHRIS KING, ETC. NINER PART # 49-132-10-00-20		 	NOTE: Niner bikes does not recommend SRAM threaded GXP bottom brackets with the CYA system, they are not compatible. Call Niner Customer Service with any questions related to this recommendation. 1.877.NINERXC
NINER EBB NINER PART # Black 49-131-09-00-20 Blue 49-131-09-00-80 Red 49-131-09-00-40 Silver 49-131-09-00-10		NINER RECOMMENDS AN EXTERNAL BEARING BOTTOM BRACKET SYSTEM WITH THE NINER EBB	

DON'T FORGET THE SPECIAL CYA INSERT REMOVAL TOOL, AVAILABLE FROM NINER. DO NOT ATTEMPT TO REMOVE CYA INSERT WITHOUT THIS TOOL.

CYA INSTALLATION

Getting Started:

YOU WILL NEED:
- NINER CYA BOTTOM BRACKET INSERT
- NINER BIKE FRAME compatible with CYA system
- CLEAN SHOP RAG
- ALCOHOL
- HEADSET PRESS COMPATIBLE WITH CARTRIDGE BEARING HEADSETS, SUCH AS PARK HHP-2

Step by step instructions for installing CYA inserts into a Niner frame with an EBB shell:

⚠ For Air 9 Carbon frames, cable routing MUST be done before CYA inserts are press fit into the frame. Please make sure to see the section on cable routing before pressing any CYA inserts into the Air 9 Carbon.

1. Cleaning the frame and CYA insert: The frame's bottom bracket shell and the insert must be totally free from lubricant or dirt. Clean using rag and alcohol.
If these parts are not cleaned properly the residual lubricant may allow the insert to rotate in the shell.

2. USING A HEADSET PRESS, install ONE SIDE of the CYA inserts at a time. This will ensure that the inserts are going into the frame straight and true. Press the inserts into the bottom bracket of the frame until they bottom out. If you are using a BB system OTHER than the standard threaded bottom bracket, press this in next as per the manufacturer's specifications.

3. Follow the crankset manufacturers' instructions to complete assembly, treating the insert as a normal bottom bracket. Mount the cranks and front derailleur as per the manufacturers' instructions.

EBB COMPATIBILITY

The Bio-Centric EBB is only designed to fit in Niner frames. It can sometimes be made to fit into other manufacturer's frames but it will not work properly. The Bio-Centric clamps to the outside face of the EBB shell and because of that it requires that the EBB shell be precisely faced. This facing is something that can only be done at a machine shop, or in the case of Niner frames, at the time of manufacture.

⚠ Some older Niner frames may require extra steps for installation.

If you have a used/older frame or if your EBB has 130 in/lbs laser etched on the non-drive side shell, contact info@ninerbikes.com for instructions.

EBB INSTALLATION

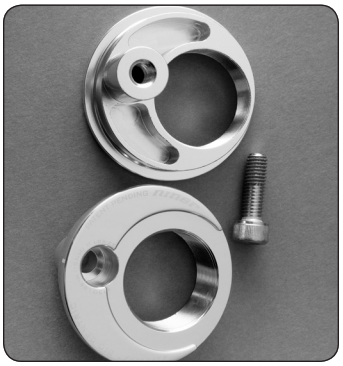

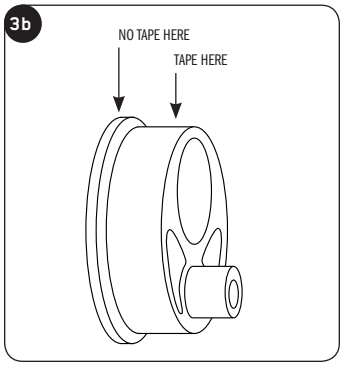

⚠ Some older Niner frames may require extra steps for installation. See a Niner Dealer or contact info@ninerbikes.com for EBB installation instructions for used/older frames or if your EBB has 130 in/lbs laser etched on the non-drive side shell.

If you don't have the necessary tools or skills to install this component, take it to an authorized Niner dealer for installation. It's critical that it be installed correctly to ensure its longevity and functionality. If you have any questions or concerns about your product, don't hesitate to contact us through our web site or by emailing info@ninerbikes.com.

Getting Started:

YOU WILL NEED:
- NINER BIO-CENTRIC EBB & BIKE FRAME
- CLEAN SHOP RAG
- ALCOHOL
- TEFLON TAPE
- TORQUE WRENCH
- 6MM HEX (ALLEN) WRENCH

Step by step instructions for installing the Niner Bio-Centric EBB in a new Niner frame:

1. Mount frame in bike stand, as per bike stand instructions.

2. Cleaning the frame and eccentric insert: The frame's bottom bracket shell and the Bio-Centric Bottom Bracket Insert (EBB) must be totally free from lubricant or dirt. Clean using rag and alcohol. If these parts are not cleaned properly the residual lubricant may allow the EBB to rotate in the shell.

3. Preparing the EBB: Before installing the EBB the inside shoulder must be wrapped with Teflon tape. The placement of the tape is crucial; it must not contact the outer flange of the EBB. If the Teflon tape is applied to the outer flange of the EBB it may cause slipping in the Shell. Cover the inside shoulders of the two EBB halves with two layers of tape.

4. Installing the EBB: Carefully slide the two EBB halves into the frame, they should slide in fairly easily without causing the Teflon tape to bunch up against the flange. Align the two EBB halves so that the tension bolt may be installed; torque the bolt to 190 in-lbs.

5. Install Bottom Bracket and Crank: Install the bottom bracket cups and crankset per manufacturer's specification. Some chainring/bottom bracket spindle length combinations may cause interference with the chainstay. If this occurs you will most likely be able to rotate the EBB so that the bottom bracket is in a more forward position to eliminate the interference between the chainring and chainstay.

6. Tensioning Chain: With the crank and bottom bracket properly installed it is time to set the chain tension using the EBB. Loosen the EBB tension bolt so that the EBB may be rotated. One of the easiest ways to rotate the EBB is by inserting a 6mm hex wrench into the hole on the Drive Side of the EBB. The wrench will slip between the spider arms of the crank, inside the chainring. Use the crank to rotate the EBB by bracing the wrench against the spider of the crank. Once the proper tension is acquired torque the tension bolt to 190 in-lbs.

7. Ride the Bike: Now that the EBB is installed it is time to go ride! Enjoy the quiet ride as the Bio-Centric EBB holds your chain tension perfectly.

SINGLESPEED GEARING INFORMATION

We have designed our singlespeed compatible bikes to accept tires as large as 2.35" (actual measurement, not "claimed", some manufacturers 2.55" tires will fit with plenty of mud clearance). Because of this there is limited room between the chainring and rear chainstay. Because of the rotation of the eccentric bottom bracket, we have ensured clearance no matter where the EBB position landed as long as you stay within the recommended chainring sizing range.

⚠ CAUTION! We highly recommend using a 32 tooth front chainring for SS application. A larger chainring could contact the chainstays in certain EBB positions and could cause damage.

Most singlespeed setups requires that the front chainring be in the middle chainring position to maximize chainline. You can use a larger chainring if you mount it in the large chainring position on your cranks, however, this may cause chainline issues with some SS setups, specifically thread-on style freewheels.

On the facing page are gear ratio charts to help you find a chainring/cog combination that will mimic your current setup.

26 INCH GEAR RATIOS						
		CHAINRING SIZE				
		29	30	32	34	36
COG SIZE	14	53.86	55.71	59.43	63.14	66.86
	15	50.27	52.00	55.47	58.93	62.40
	16	47.13	48.75	52.00	55.25	58.50
	17	44.35	45.88	48.94	52.00	55.06
	18	41.89	43.33	46.22	49.11	52.00
	19	39.68	41.05	43.79	46.53	49.26
	20	37.70	39.00	41.60	44.20	46.80
	21	35.90	37.14	39.62	42.10	44.57
	22	34.27	35.45	37.82	40.18	42.55

29 INCH GEAR RATIOS						
		CHAINRING SIZE				
		29	30	32	34	36
COG SIZE	16	52.56	54.38	58.00	61.63	65.25
	17	49.47	51.18	54.59	58.00	61.41
	18	46.72	48.33	51.56	54.78	58.00
	19	44.26	45.79	48.84	51.89	54.95
	20	42.05	43.50	46.40	49.30	52.20
	21	40.05	41.43	44.19	46.95	49.71
	22	38.23	39.55	42.18	44.82	47.45
	23	36.57	37.83	40.35	42.87	45.39
	24	35.04	36.25	38.67	41.08	43.50

As an example, if you have a 32t chainring and 17t cog on a 26" bike, you will want to run a 32t chainring and 19t cog on your new Niner in order to have a very similar gear ratio with 29" wheels.

NINER CARBON & STEEL FORK SPECIFICATIONS

	MATERIAL	STEERER TUBE	AXLE TO CROWN	RAKE	BRAKE MOUNT	MAX ROTOR SIZE
CARBON TAPER STEERER	Carbon	Tapered (1.125-1.5”)	470mm	45mm	post mount	185mm
CARBON STRAIGHT STEERER	Carbon	1-1/8”	470mm	45mm	post mount	185mm
STEEL	Reynolds Steel	1-1/8”	470mm	45mm	IS Mount	N/A

CARBON FORK SPECIFICATIONS & COMPATIBILITY:

• Easton XC1 wheels, both geared and SS (since the front wheel is the same) do not fit the Niner carbon fork. This problem is limited to ONLY the XC1 wheelset. Easton’s new Haven wheels DO fit.

• Industry 9 wheels that use the convertible front hub (9mm QR / 15mm / 20mm) need special end caps available through Industry 9.

As standards in the mountain biking world are always changing, it is impossible to update the dropout of our fork to accomodate each new hub design. We are sorry for any inconvenience this may cause. Currently, these are the only issues we are aware of, but if you encounter any fit issues with hubs and the Niner carbon fork please let us know.

NINER CARBON FORK INSTALLATION

Thank you for your purchase of Niner's Carbon rigid fork. We spent a lot of time on this fork, and are as excited as you are for you to get it on your bike and ride it. But hold on a sec, before you tear the box apart in excitement and install the fork, there are some things you need to know. This is one of the most advanced forks on the planet, and as such requires some care and understanding. Please read this manual thoroughly, we put it together for your safety.

If you don't have the necessary tools or skills to install this fork, take it to an authorized Niner dealer for installation. It's critical that this fork be installed correctly to insure its longevity and functionality. If you have any questions or concerns about your product, don't hesitate to contact us through our web site or by emailing info@ninerbikes.com.

⚠ WARNING: Bicycle forks are subject to wear and stress during their lifetime. If the fork's useful life is exceeded, it can suddenly and catastrophically fail, potentially causing serious injury or death to the rider. Scratches, cracks, fraying or discoloration are signs of stress-caused fatigue and indicate that the fork is at the end of its useful life and should be replaced. While the materials and workmanship of your fork are covered by warranty, this is no guarantee that the fork will last the full term of the warranty. Product life is directly related to the kind of riding you do and to the treatment to which you submit the bicycle and fork. The warranty is not meant to suggest the fork cannot be broken or will last forever - it only means that the fork is covered subject to the terms of the warranty. For warranty details visit www.ninerbikes.com. For more information relating to product life please consult with your dealer.

Frequent inspection of your fork is important for your safety. Perform a visual inspection of the fork and bicycle before every ride. Periodic detailed inspection of the bicycle is also important. How frequently this detailed inspection is needed depends upon you. Because your dealer and Niner Bikes cannot anticipate or track your use, you must take responsibility for bringing your bike to your dealer for periodic inspection and service. Your dealer can help you decide what frequency of inspection and service is appropriate.

Parts Included:
NINER CARBON FORK
COMPRESSION ADJUSTMENT PLUG
BRAKE HOSE CLIPS (2)
FSA ASSEMBLY COMPOUND

Recommended Tools:
HACKSAW AND 32TPI BLADE
HEADSET TOOLS
5MM HEX KEY (W/ TORQUE WRENCH ADAPTOR)
6MM HEX KEY (W/ TORQUE WRENCH ADAPTOR)
STEERER TUBE CUTTING GUIDE (PARK SG-6)
100-200 GRIT SANDPAPER
MASKING TAPE

Stem Compatibility and Preparation:

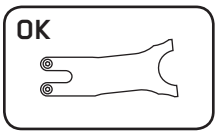

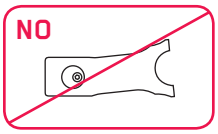

⚠ The Niner carbon fork must be used with a circumferential clamp stem. Use of a pinch or wedge clamp style stem may cause damage to the steerer tube which may result in rider injury or death.

Before attaching your stem to the steerer tube, ensure that the inside of the stem is free of burrs or other defects that might score or scratch the steerer tube. Damaging the steerer tube could cause it to fail, resulting in rider injury or death.

(continued next page)

NINER CARBON FORK INSTALLATION (CONTINUED)

INSTALLATION:

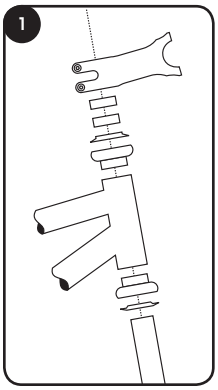

1.1 Install headset as per manufactures instructions.

1.2 Press headset fork crown race onto the fork race seat using crown race seating tool.

⚠ When removing the crown race for any reason, use only a crown race removal tool such as the Park CRP-1

1.3 Insert fork steerer tube into head tube.

1.4 Slide the headset compression ring, top cover, spacers and stem onto the steerer tube.

⚠ Do not exceed 40mm spacer stack height.

Do not place spacers above the stem. The stem must clamp the area reinforced by the compression adjustment plug installed in step 5.1

Do not use tall crown races or place spacers under the crown race to adjust head angle.

Do not grease the carbon steerer tube.

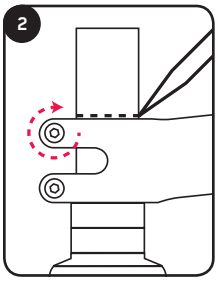

2.1 Ensure fork/headset assembly is snug and the stem is seated firmly against the headset top cover and spacers.

2.2 Tighten one stem bolt just enough to hold the stem in place.

2.3 Mark or scribe the steerer tube at the top edge of the stem.

2.4 Remove the stem from the steerer tube and the fork from the head tube.

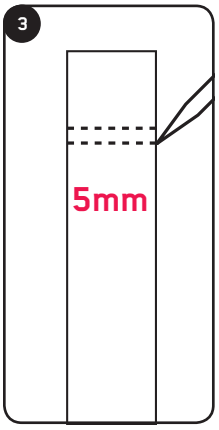

3.1 Mark the steerer tube again, 5mm below the first mark. This offset allows for sufficient top cap compression. Any cut made higher or lower may result in a loose headset or insufficient clamping area.

3.2 Wrap the steerer with masking tape immediately below the new cut line. This will reduce the likelihood of splintering during the cutting process.

⚠ Use a steerer tube cutting guide such as the Park SG-6 to hold the steerer, DO NOT clamp the fork or steerer in a vice.

3.4 Using a 32tpi hacksaw blade, cut steerer at a 90° angle on the second measured mark. Wetting the blade will reduce dust.

3.5 Remove masking tape. Using sandpaper, remove all burrs from the trimmed steerer tube.

⚠ The compression adjustment plug provided with this product is an integral and necessary component of the Niner carbon fork and must be installed correctly to maintain the structural integrity of the Niner carbon fork system. Failure to properly install the compression adjustment plug or use of a substitute part may result in the failure of the fork, resulting in bodily injury or death.

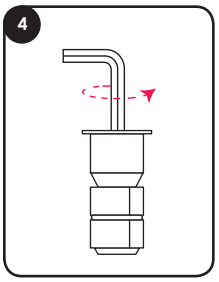

4.1 To prepare the compression adjustment plug, remove the carbon top cap with a 4mm hex wrench and loosen the internal 6mm bolt until the outer serrated pieces have retracted enough to slip the assembly into the top of the steerer tube.

(continued next page)

NINER CARBON FORK INSTALLATION (CONTINUED)

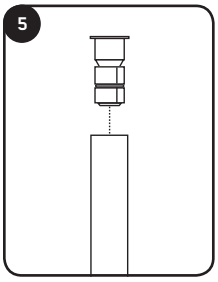

5.1 Install the plug into the steerer tube ensuring that the upper flange of the plug is sitting tightly against the top of the steerer tube.

5.2 Tighten the 6mm internal hex head to 7nm.

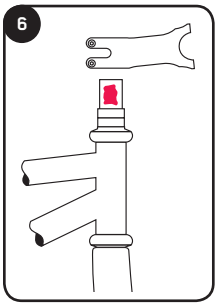

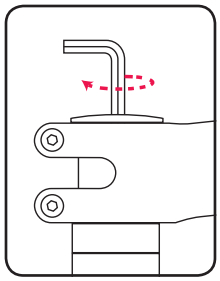

6.0 Re-assemble fork and headset as in Step 1.

6.1 Apply FSA assembly compound to the steerer in the stem clamp zone. This compound will increase friction and decrease the amount of force required to hold the stem firmly in place.

6.2 Install the stem and press the fork and stem together, compressing the headset. Check that there is about 2mm of space between the top of the stem and the top of the compression adjustment plug flange.

6.3 With a 4mm hex wrench, install the carbon top cap by threading it into the compression adjustment plug. Tighten to a torque spec of 25 kgfcm (22 in.lb.)

⚠ This step "pre-loads" the bearings only.
Tightening the top cap does not keep the headset from becoming loose. Be sure to complete Step 7 before riding!

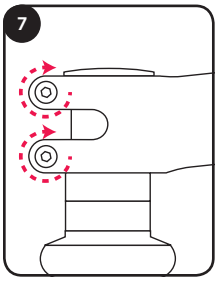

7.1 Attach front wheel to fork.

7.2 Align stem with front wheel.

7.3 Tighten both stem bolts to manufacturer's specifications.

⚠ OVERTIGHTENING THE STEM may cause damage to the steerer tube which could result in failure leading to serious injury or death. Check the recommended torque spec for the stem bolts prior to final stem installation and do not exceed these torque specs.

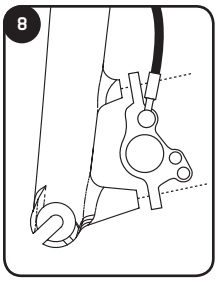

8.1 Install the brake caliper per the manufacturers instructions.

⚠ This fork is designed for a maximum rotor size of 185mm. Use of larger rotors will void the warranty and could lead to damage to the fork that may cause serious injury or death.